REV	ECN	DATE	BY	CHANGE OR ADDITION
NC	1343	5/1/2017	LUND	INITIAL RELEASE

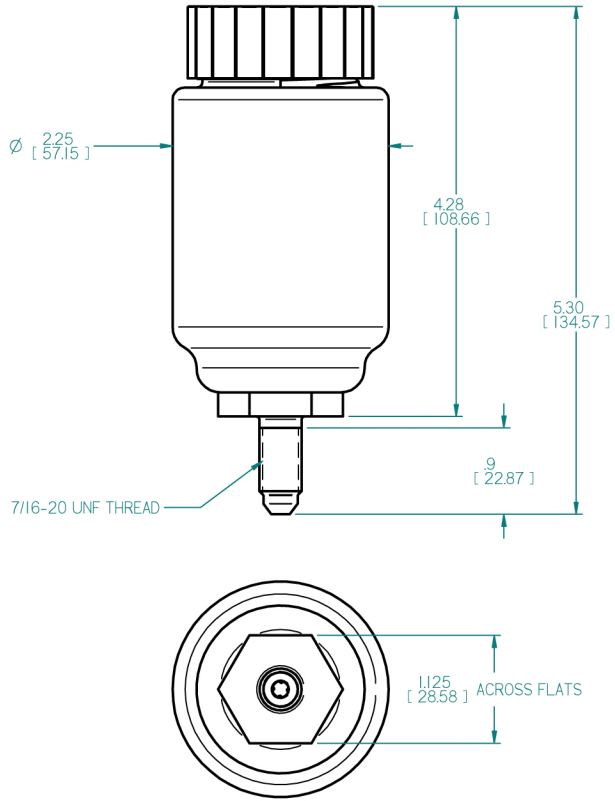

NOTES:

1. DIMENSIONS AND TOLERANCES PER ASME Y14.5 - 2009
2. UNLESS OTHERWISE SPECIFIED, ALL DIMENSIONS ARE IN INCHES [MM].
3. LUBRICATE O-RING WITH A SMALL AMOUNT OF BRAKE FLUID PRIOR TO INSTALLATION.
4. DO NOT USE TEFLON TAPE, THREAD SEALANT OR THREAD LOCKING COMPOUND.
5. INTERNAL VOLUME = 5.3 FL-OZ, 158 mL

TILTON ENGINEERING, INC. FAX 805/688-2745
25 EASY STREET, P.O. BOX 1787, BUELLTON, CA 93427 805/688-2353

TITLE: **MASTER CYLINDER RESERVOIR**
5.3 FL OZ, AN-4 MALE OUTLET, REMOTE MOUNT

DRAWN BY WAHL	CHKD LUND	SCALE 1 : 1	SIZE B	DWG 6540	REV NC
P/N 74-230	DATE 03/14/2017	SHEET 1 OF 1			

TILTON ENGINEERING INC

This document contains proprietary information of TILTON ENGINEERING, INC., and its receipt or possession does not convey any rights to reproduce, disclose or distribute its contents, or to manufacture, use or sell anything it may describe. Reproduction, disclosure, or use without specific written authorization of TILTON ENGINEERING, INC. is strictly forbidden.

COMPETITION SUPPLIES LTD
PROFESSIONAL MOTORSPORT COMPONENTS

Unit 17 Silverstone Circuit
Towcester, Northants, NN12 8TL, U.K.
Tel: +44 (0) 1327 857991
email: info@competitionsupplies.com